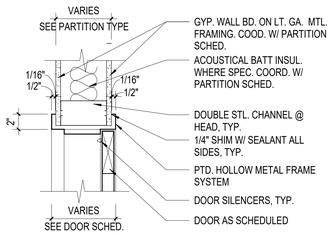

HEAD DETAIL

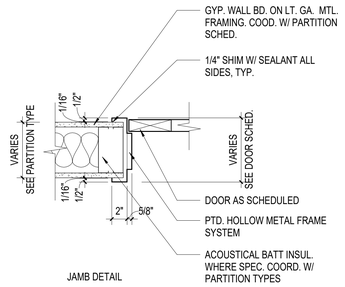

JAMB DETAIL

3 / A3.0 TYP HM DOOR HEAD AND JAMB DETAILS

1 1/2" = 1'-0"

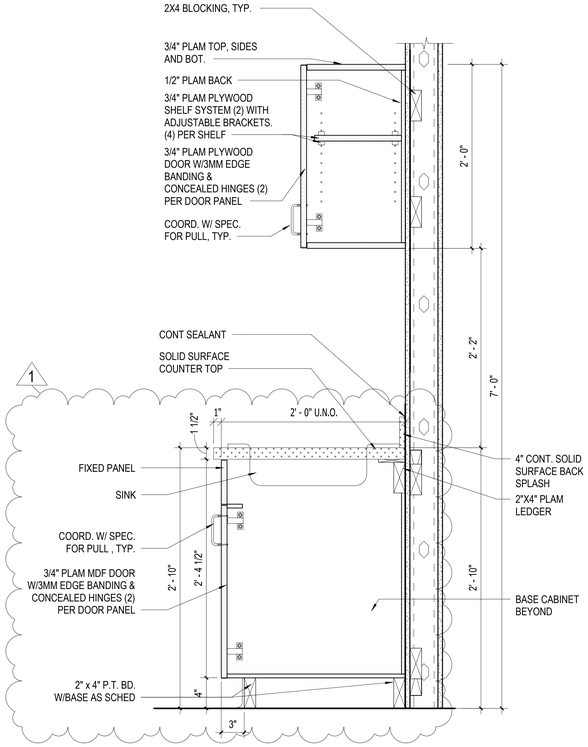

4 / A3.0 SINK BASE/ WALL CABINET DETAIL

1 1/2" = 1'-0"

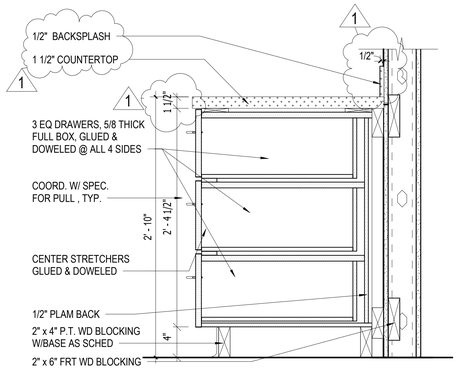

5 / A3.0 DRAWER BASE DETAIL

1 1/2" = 1'-0"

DOOR SCHEDULE GENERAL NOTES

1. DOORS ARE TO BE PROVIDED WITH THE MANUFACTURER'S LIFETIME WARRANTY AND BE PREPPED TO RECEIVE CLOSERS, AND LATCH SETS AND THREE HINGES.
2. ALL LOCKS SHALL BE KEYED INDIVIDUALLY.
3. ALL HARDWARE SETS TO INCLUDE FLOOR MOUNTED STOPS U.N.O. SATIN STAINLESS STEEL WITH GREY RESILIENT INSERTS.
4. ALL FRAMES SHALL BE FURNISHED WITH SILENCERS.
5. ALL HARDWARE IS LEVER HANDLE AND IS TO COMPLY WITH ADA REQUIREMENTS.
6. DOOR CLOSERS ARE TO BE MOUNTED ON THE INTERIOR OF THE ROOM SIDE OF THE DOOR.
7. ALL TYPE 1 FRAMES TO BE PAINTED FINISH P.02. REFER TO MATERIAL SCHEDULE ON SHEET A1.03 FOR ADDITIONAL INFORMATION.
8. PAINT DOOR TYPES FINISH P.02. REFER TO MATERIAL SCHEDULE ON SHEET A1.03 FOR ADDITIONAL INFORMATION.
9. STUD FRAMING EITHER SIDE OF DOOR TO EXTEND FROM SLAB TO STRUCTURAL DECK ABOVE WITH KICKER ABOVE THE CEILING.

HARDWARE SETS

HW-1				
1EA	LEVER OFFICE LOCK	CLX3351 NZD	CORBIN	U26D
3EA	HINGES	5BB1HW	IVES	626
1EA	WALL STOP	WS406	IVES	626
3 EA	SILENCER	SR64	IVES	GRAY
HW-2				
1EA	LEVER STOREROOM LOCK	CLX3357 NZD	CORBIN	U26D
3EA	HINGES	5BB1HW	IVES	626
1EA	WALL STOP	WS406	IVES	626
1EA	KICK PLATE	8400	IVES	626
3EA	SILENCER	SR64	IVES	GRAY
HW-3				
1EA	FULL DUMMY TRIM	CLX3370	CORBIN	U26D
ALL OTHER HARDWARE EXISTING TO REMAIN				
HW-4				
1EA	ENTRY LOCK W/ DEADBOLT	ML20608XSEC	CORBIN	U26D
1EA	SURFACE MOUNTED KEYLESS ACCESS	SN200 SERIES	CORBIN	U26D
1EA	ELECTRO MAGNETIC LOCK	SN200 SERIES	CORBIN	U26D
1EA	MOTION DETECTOR	SN200 SERIES	CORBIN	U26D
1EA	EXIT BUTTON	SN200 SERIES	CORBIN	U26D
1EA	CONTINUOUS HINGE	780-124HD	HAGER	628
1EA	DOOR CLOSER	4000	LCN	US28
1EA	GASKETING	137SA	NGP	AL
1EA	PANIC BAR	88 SERIES	VON	U26D
HW-5				
1EA	ENTRY LOCK W/ DEADBOLT	ML20608XSEC	CORBIN	U26D
2EA	CONTINUOUS HINGE	780-124HD	HAGER	628
2EA	DOOR CLOSER	4000	LCN	US28
2EA	GASKETING	137SA	NGP	AL
1EA	SURFACE MOUNTED KEYLESS ACCESS	SN200 SERIES	CORBIN	U26D
1EA	ELECTRO MAGNETIC LOCK	SN200 SERIES	CORBIN	U26D
1EA	PANIC BAR	88 SERIES	VON	U26D
1EA	MOTION DETECTOR	SN200 SERIES	CORBIN	U26D
1EA	EXIT BUTTON	SN200 SERIES	CORBIN	U26D
HW-6				
1EA	LEVER ENTRY LOCK	CLX3361 NZD	CORBIN	U26D
6EA	HINGES	5BB1HW	IVES	626
2EA	DOOR CLOSER	4000	LCN	US28
2EA	WALL STOP	WS406	IVES	626
6EA	SILENCER	SR64	IVES	GRAY
1EA	SURFACE MOUNTED KEYLESS ACCESS	SN200 SERIES	CORBIN	U26D
1EA	ELECTRO MAGNETIC LOCK	SN200 SERIES	CORBIN	U26D
1EA	EXIT BUTTON	SN200 SERIES	CORBIN	U26D
HW-7				
1EA	LEVER RESTROOM LOCK	CLX3359	CORBIN	U26D
3EA	HINGES	5BB1HW	IVES	626
1EA	DOOR CLOSER	4000	LCN	US28
1EA	WALL STOP	WS406	IVES	626
1EA	KICK PLATE	8400	IVES	626
3EA	SILENCER	SR64	IVES	GRAY
1EA	DEADBOLT INDICATOR	DL2200	CORBIN	U26D
1EA	ELECTRO MAGNETIC LOCK	SN200 SERIES	CORBIN	U26D
HW-8				
1EA	LEVER ENTRY LOCK	CLX3361 NZD	CORBIN	U26D
3EA	HINGES	5BB1HW	IVES	626
1EA	DOOR CLOSER	4000	LCN	US28
3EA	SILENCER	SR64	IVES	GRAY
1EA	SURFACE MOUNTED KEYLESS ACCESS	SN200 SERIES	CORBIN	U26D
1EA	ELECTRO MAGNETIC LOCK	SN200 SERIES	CORBIN	U26D
1EA	PANIC BAR	ED4200	CORBIN	628
1EA	WALL STOP	SR64	IVES	GRAY
1EA	PANIC BAR	ED4200	CORBIN	628

DOOR SCHEDULE

	DOOR				FRAME				
NO	TYPE	WIDTH	HEIGHT	MATERIAL	TYPE	MATERIAL	HARDWARE	THRESHOLD	NOTES
1	D (2)	3' - 0"	6' - 8"	ALUM	1	ALUM	5	4/A3.1	
2	D (2)	3' - 0"	6' - 8"	ALUM	1	ALUM	5	2/A3.1	
3	B	3' - 0"	6' - 8"	WD	1	HM	1	-	
4	B	3' - 0"	6' - 8"	WD	1	HM	1	-	
5	B	3' - 0"	6' - 8"	WD	1	HM	1	-	
6	B	3' - 0"	6' - 8"	WD	1	HM	1	-	
7	B	3' - 0"	6' - 8"	WD	1	HM	1	-	
8	D	3' - 0"	6' - 8"	ALUM	1	HM	4	4/A3.1	
9	B	3' - 0"	6' - 8"	WD	1	HM	1	-	
10	B	3' - 0"	6' - 8"	WD	1	HM	1	-	
11	A (2)	3' - 0"	6' - 8"	WD	1	HM	6	3/A3.1	
12	A (2)	3' - 0"	6' - 8"	WD	1	HM	2	2/A3.1	
13	A	3' - 0"	6' - 8"	WD	1	HM	2	2/A3.1	
14	ETR	ETR	ETR	ETR	ETR	ETR	3	5/A3.1	
15	ETR	ETR	ETR	ETR	ETR	ETR	3	5/A3.1	
16	ETR	ETR	ETR	ETR	ETR	ETR	3	2/A3.1	
17	ETR	ETR	ETR	ETR	ETR	ETR	7	2/A3.1	
18	A	3' - 0"	6' - 8"	WD	1	HM	8	-	
19	A	3' - 0"	6' - 8"	WD	1	HM	2	-	
20	A	3' - 0"	6' - 8"	WD	1	HM	8	-	
21	ETR	ETR	ETR	ETR	ETR	ETR	ETR	-	
22	ETR	ETR	ETR	ETR	ETR	ETR	ETR	-	
23	ETR	ETR	ETR	ETR	ETR	ETR	ETR	-	
24	ETR	ETR	ETR	ETR	ETR	ETR	ETR	-	
25	A	3' - 0"	6' - 8"	WD	1	HM	2	2/A3.1	
26	ETR	ETR	ETR	ETR	ETR	ETR	ETR	ETR	
28	ETR	ETR	ETR	ETR	ETR	ETR	ETR	ETR	

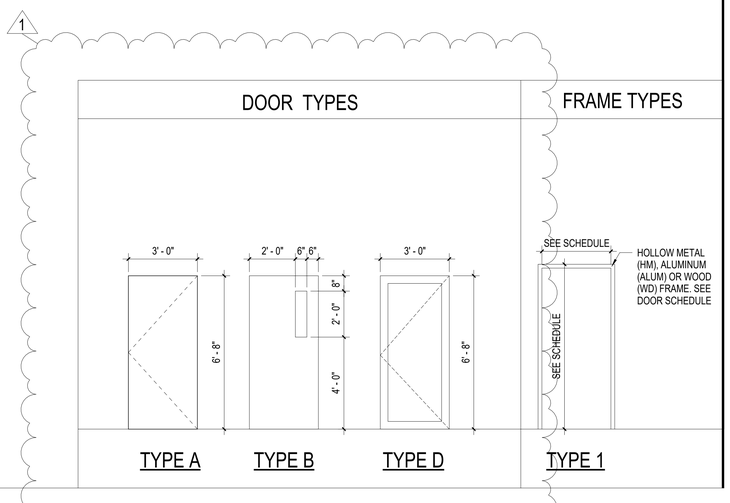

SAMAHA
10521 Rosehaven Street, Suite 200 Fairfax, VA 22030
Phone 703-691-3311

LOUDOUN COUNTY PRCS

750 MILLER DR
LEESBURG, VA 20175

BID SET

LOUDOUN COUNTY

NO	REVISION	DATE
1	ADDENDUM	08/23/24

Sheet Title:

DETAILS, DOORS, & DOOR SCHEDULE

Issue Date: 7/24/24

Sheet Number:

A3.0

Sheet No. in Set: 6 Total No. Sheets: -

Project Number: XXXXXX
Drawn By: Author
Checked By: Checker